PROTEKT
ul. Starorudzka 9
93-403 Łódź
POLAND
tel: (+48 42) 680 20 83
fax: (+48 42) 680 20 93
e-mail: protekt@protekt.com.pl

Product Technical File

Anchor point AT 181

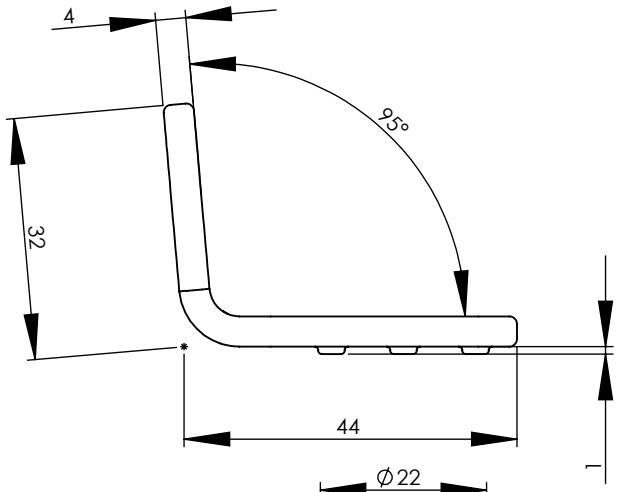

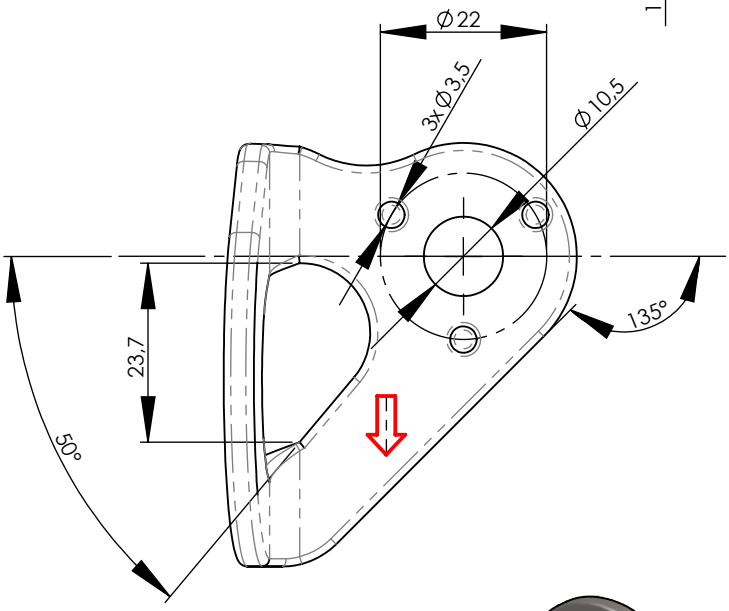

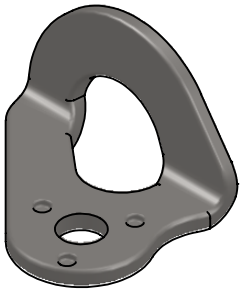

Set AT181-01
AT 181 + Stud anchor stainless steel

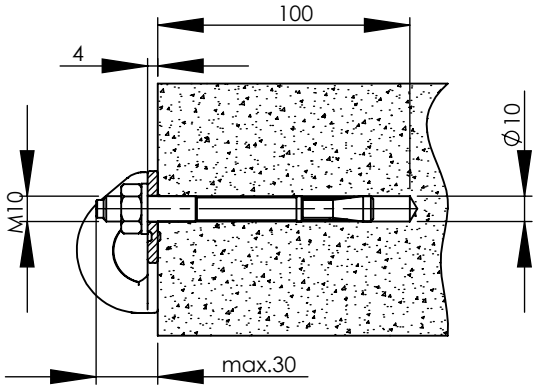

Set AT181-02
AT 181 + Stud anchor galvanized steel

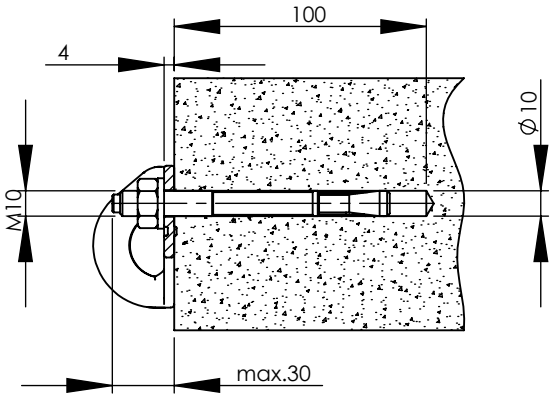

AT181
Mountage to steel profile

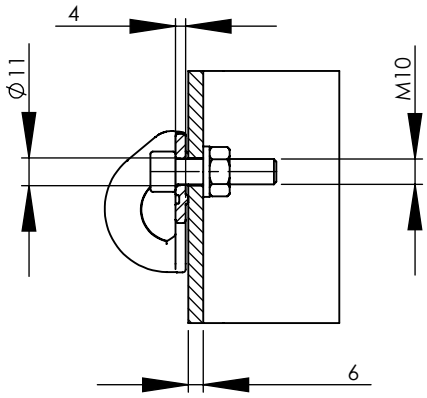

PARAMETERS

Static strength: min. 10 kN
Material: Stainless steel
Number of person: 1
Holding down bolt: M10
Standard: EN 795:1996 class A

CE 0082